UV Light Meter

Model: LS126C
User Manual V2.36

Please read this manual carefully before using and reserve it for reference.

I. Product introduction

The UVC is also known as short-wave sterilization ultraviolet light. 253.7nm wavelength ultraviolet radiation from low pressure mercury lamp is widely used in ultraviolet sterilization industry. LS126C UV light meter is specially designed to measure UVC intensity and energy values, which is widely applied in hospitals, CDC, pharmaceutical companies, FDA, etc. for UV intensity and energy measurement.

Standards for the product

JJG 879-2015 Verification Regulation of Ultraviolet Radiometers

WST 367-2012 Regulation of disinfection technique in healthcare settings

II. Technical Parameters

Spectral response	230nm-280nm, λp = 254nm
Power measuring range	0 - 20000 μW/cm^2
Power resolution	0.1μW/cm^2
Energy measuring range	0-9999999μJ/cm^2
Relative indication error (H is the standard value)	H<50μW/cm^2: ±4μW/cm^2, H>=50μW/cm^2: ±8% H (relative to NIM standard)
Long wave response error	<60%
Cosine characteristics (directional response) error	10%
Linearity error	±1%
Short-term instability	±1%(30min after startup)
Fatigue characteristics	attenuation <2%
Error of zero	±0.1% of full scale
Response time	<0.5 seconds
Power data storage interval	1s/10s/60s optional
Recording period	10 min / 100 min / 600 min
Bluetooth transmission distance	50 meters (open area)
Instrument size	148mm long * 76mm wide ×26mm high
Probe size	diameter 39mm * thickness 15mm

Probe wire length	1 meter
Instrument weight	about 300 grams
Display	240*160 dot matrix LCD
Battery	4 AAA alkaline dry batteries
Operating Temperature	0° to 50°C, <85% RH
Supply Voltage	DC5V
Operating Current	20mA
Operating Power Consumption	100mW

III. Spectral response curve

Use of high-precision UVC optical filters and professional UV sensor allows the instrument to almost give no response to UVA, UVB, visible light, etc.

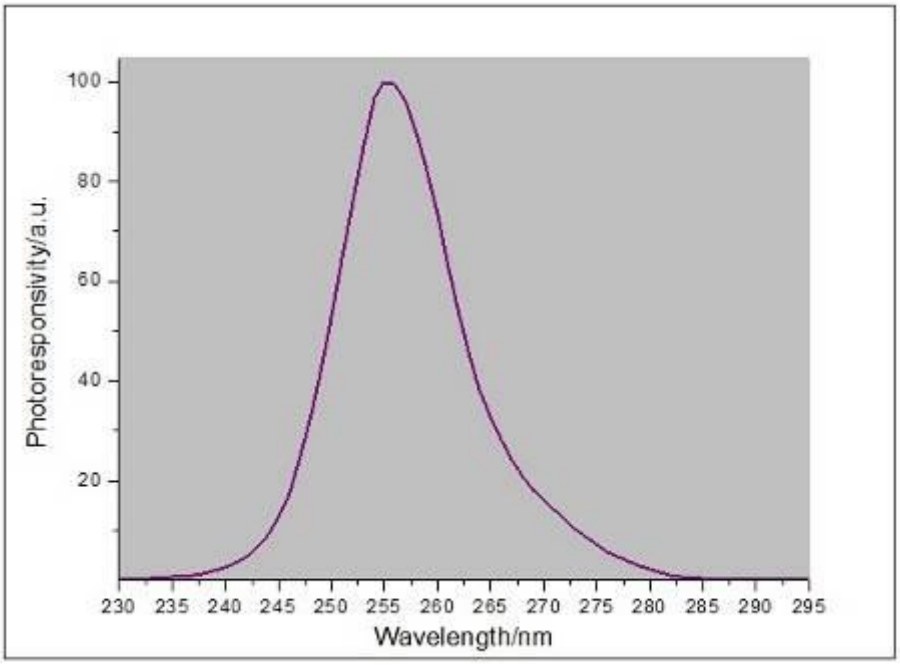

IV. Product features

1. Specially designed for 253.7nm UV germicidal lamps (low-pressure mercury lamps).
2. Self-equipped with a real-time clock that can be used to trace the accurate time of the measurement result.

3. Data storage automatically before timing shutdown, which makes unattended measurements possible.
4. High-precision UVC optical filters and professional UV sensor, which allow the instrument to almost give no response to other wavebands.
5. Equipped with USB interface and dedicated PC software featured with parameter configuration, data reading, and UV power curve, exporting of UV power data to EXCEL, report generation functions.
6. With power curve display function and statistical function (real-time value, maximum value, minimum value, average value, measurement duration, date/time, Energy value), which is used to analyze the change trend of the luminous intensity after lightening the lamp.
7. Advanced digital probe technology, by which analog signal conversion to digital signal on the probe.

V. Operations

1. Power on/off

- **Power on**: Press "HOLD" to power on the instrument. After powering on, the instrument displays the information of the calibration date, production date, version number and serial number. Then, the latest record is displayed, as shown below:

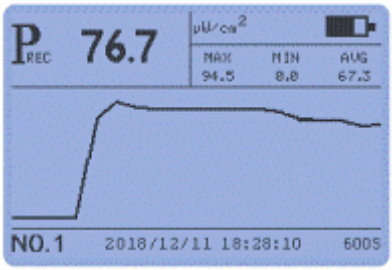

- **Power off:** Long press the "HOLD" button to power off; or the instrument will automatically power off when "Auto Off" set to ON.
- The data recorded automatically before shutdown, when instrument power on, the latest recorded (No.1 record) displayed.

2. Parameter settings mode

In the off state, long press the "HOLD" button 3s to enter the parameter setting mode. In the setting mode, "▲" and "▼" are Select buttons, and "SET" is the confirm button.

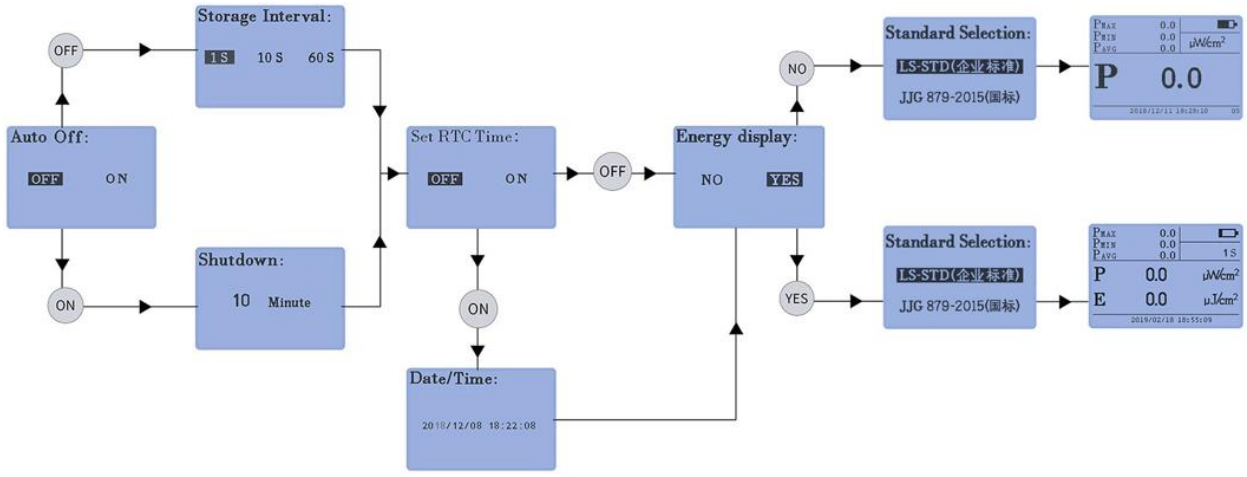

A. Select whether automatically power off or not (Auto Off: ON/OFF)

Short press the "▲" or "▼" button to select ON/OFF

Selecting ON indicates that the instrument automatically powers off as long as no operation within the set time.
Selecting OFF indicates that the user has to manually turn the instrument off, and the instrument will not automatically power off.

If you select ON and press "↵", the system will enter "Shutdown" in which Setting automatic shutdown time

If you select OFF and press "↵", the system will enter "Storage Interval" in which you can set the storage interval.

B. Setting of automatic shutdown time (Shutdown: 1 minute to 10 minutes)

Short press "▲" or "▼" to set the shutdown time. The system will automatically power off if there is no operation within the set time. When Auto Off set ON, the system stores the data every 1 second and saves the record to the data record of No.1. Short press the "↵" button to confirm the setting.

C. Storage interval setting (Storage interval: 1s/10s/60s)

When setting Auto Off is off, the instrument stores data according to the storage interval. For each record, there are up to 600 measured values stored. The larger the storage interval is, the longer the recording period will be. The storage interval 1s/10s/60s correspond to the recording period 10 minutes / 100 minutes / 600 minutes, respectively. When the number of the stored value exceeds 600, the oldest measured value is automatically deleted, and the most recent values are kept.

Short press "▲" or "▼" button to set the storage interval, short press "↵" button to confirm the setting.

D. Set RTC Time: ON/OFF

Short press the "▲" or "▼" button to select ON/OFF

Select ON to set the RTC. Short press the "DEL" button to enter the Date/Time setting.

Select OFF not to set the RTC, Short press "DEL" to enter the next setting: whether to display energy.

E. Setting Date/Time of the RTC

Short press "▲" or "▼" button to progressively increase or decrease the current flashing item; short press "DEL" to make a switch among year, month, day, hour, minute and second. Short press "HOLD" to enter the next setting mode: whether to display energy.

F. Energy Display: NO/YES

Short press "▲" or "▼" button to select NO/YES.

Select YES to display energy, select NO not to display energy.

Short press "DEL" to save and exit the setting mode, the instrument enters the measurement mode.

G. Standard Selection

Short press "▲" or "▼" Select Standard.

LS-STD (Enterprise Standard): The instrument is calibrated according to the enterprise standard.
JJG 879-2015 (National Standard): The instrument is calibrated according to the national standard.

Short press "DEL"to complete the setting and enter measurement mode.

3. Measurement mode

- In record data query mode, press the "HOLD" button to enter the measurement mode. The system displays the real-time value of the power, maximum value, minimum value, average value, measurement duration, real-time clock and energy values (according to the setting whether to display).

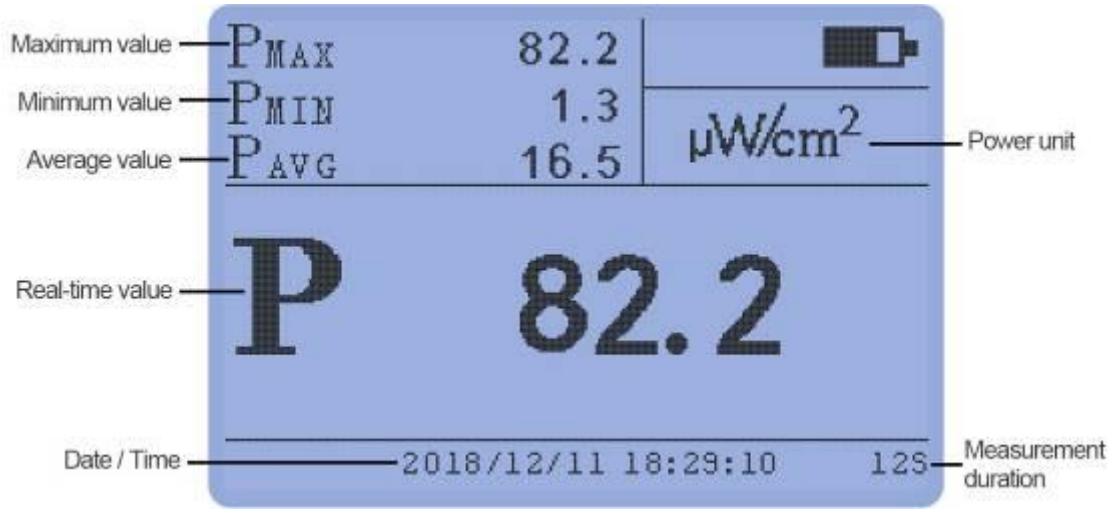

- In the measurement mode, if the backlight is off, press the "HOLD" button to light the backlight; if the backlight is already lit, short press the "HOLD" button, and the "HOLD" icon will be displayed in the lower left corner of the interface. All data will be holding on the LCD, and the current data will be recorded.
- In the "HOLD" state, if the backlight is off, press the "HOLD" button to light the backlight; if the backlight is already lit, short press the "HOLD" button to cancel the HOLD state and start a new measurement.
- In the measurement mode, if the backlight is off, short press the "DEL" button to light the backlight; if the backlight is already lit, press the "DEL" button to clear up the current data and start a new measurement.
- In the measurement mode, short press "▲" or "▼" to enter the Record data query mode

4. Record data query mode

- After power on, enter the Record data query mode. The instrument will display the latest recorded data No.1 (up to 25 recorded data are stored in the instrument, and the oldest recorded data will be deleted automatically when exceed 25 recorded data).
- Short press "▲" or "▼" to scroll up or down a recorded data.
- Long press the "DEL" button 3S to clear all recorded data.
- Short press the "HOLD" button to enter the measurement mode.

5. PC software operation

The instrument offers USB interface and the PC software. It provides multiple functions, such as reading of all the recorded data in the instrument on the PC software, displaying of the power curve, exporting of the power data to EXCEL, printing of the report, etc. For details, please refer to the PC software and its user manual in the attached U disk.

VI. Measurement and precautions

1. When not in use, please long press the "" button to power off.
2. Avoid contacting with corrosive materials and keep away from high humidity.
3. After shutdown, store it in a special packing box and keep it in a safe place. Protect the photosensitive part of the probe from polluting.
4. The recommended period of calibration is one year.
5. Because the UV probe is sensitive to humidity changes, the environment in which it is stored is important. When not in use for a long time, be sure to store the instrument in a low humidity environment.
6. When the instrument displays low battery, replace the battery.

VII. China National Standard

1) WS/T 367-2012 "*Regulation of Disinfection Technique in Healthcare Settings*" Page 15, Appendix A.3 Effect monitoring of ultraviolet disinfection.
2) The 2009 version of "*Technical Specifications for Disinfection in Hospitals*" Page 9, 2.3 UV disinfection.
3) Rated ultraviolet irradiance values according to GB/T 19258.1-2022 UV radiation sources for germicidal purposes — Part 1: Low-pressure mercury vapour discharge lamps.

The above three national standards stipulate the following:

1. The peak wavelength of the ultraviolet germicidal lamp (low-pressure mercury lamp) is 253.7nm, which has a germicidal function.
2. The radiation intensity of the new 30W straight tube ultraviolet lamp is greater than 100μW/cm^2 as qualified.
3. The radiation intensity of the 30W straight tube ultraviolet lamp in use is greater than 70μW/cm^2 as qualified.
4. Different powers and different shapes of ultraviolet lamps have different radiation intensity values that are judged to be qualified.

5. The UV probe is placed at the center of the tested ultraviolet lamp at a vertical distance of 1 meter.

VIII. UV scale hook

In order to comply with UV germicidal lamp national standards, the UV light meter must be located at a vertical one meter below the middle of a lamp tube to measurement. Our company also provides UV scale hooks, which is 1m long. Place the instrument as shown below and hang it directly onto the lamp to facilitate on-site measurement of UV intensity.





IX. Special instructions for germicidal lamp measurement

1. Determining whether UV lamp power is up to standard

In order to meet the requirements of disinfection regulations, the automatic shutdown time is not less than 5 minutes. It is recommended to set the automatic shutdown time to 10 minutes. The instrument can (1 to 10 minutes optional) automatically power off, data recorded before automatic shutdown.

- No.1 recorded data is the latest recorded data. The curve is drawn based on historical data stored every 1 second. P_{REC} is the power value of the last shutdown time, which is used to determine whether the germicidal lamp is qualified.
- The tester places the instrument in the manner required by the test standard, turns on the instrument, and turns on the germicidal lamp before leaving the site. After the disinfection is completed, turn off the UV lamp (the disinfection time is generally much longer than 10 minutes, and the instrument has been automatically shut down at this time). The tester enters the site to turn on the instrument, and the data displayed on the instrument is the last measuring data.

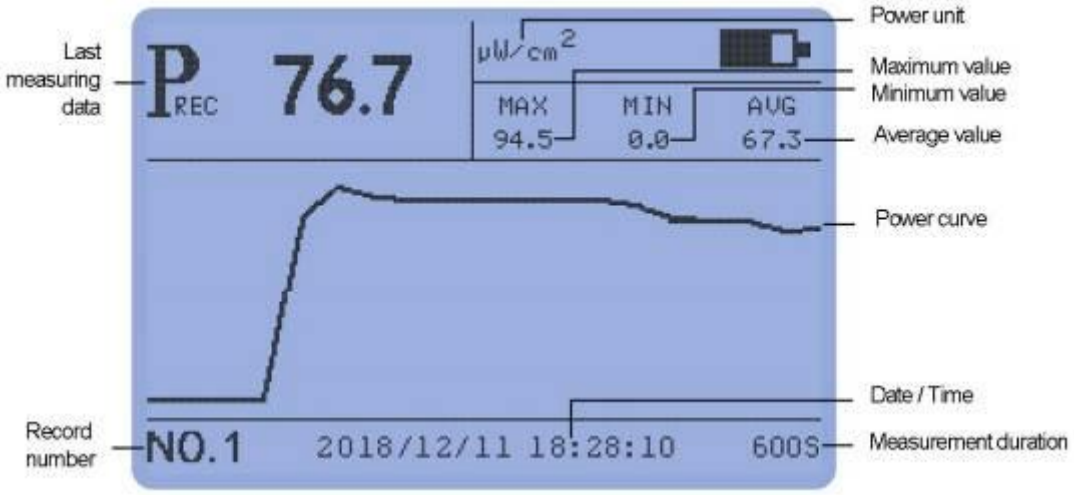

2. Data storage function

- When "Auto off" set ON, the data storage interval fixed to 1 second. The data storage time (Shutdown time) can be set from 1 to10 minutes.
- The instrument can record up to 25 records. No.1 is the latest record. Record data without loss when power off.
- In the manual shutdown mode (Auto Off = OFF), the storage interval 1s/10s/60s correspond to the recording period 10 minutes/100 minutes/600 minutes, respectively. This facilitates to record the power value of the UV lamp for a long time.

X. Packing list

No.	Description	Quantity	Unit
1	UV Light Meter	1	pcs
2	USB cable	1	pcs
3	UV scale hook	1	pcs
4	User manual	1	pcs
5	Calibration Report	1	pcs
6	Plastic box	1	pcs

XI. Service

1. The meter has one-year warranty. If the instrument works abnormally, please send the whole instrument to our company for maintenance
2. Provide users with spare parts and lifelong maintenance services

3. Provide the users with the meter calibration service
4. Free technical support for long term

Manufacturer: Shenzhen Linshang Technology Co., Ltd.
Website: www.linshangtech.com
Service hotline: 086-755-86263411
Email: sales21@linshangtech.com